LiGHT SKY



NEW

AQUA MIRROR

MIRROR EFFECT LIGHT

IP66 · RDM · DMX 512 · Art-net · S-ACN · RoHS

Optics

Optical Mirrors: Consists of 1 large mirror (407mm x 232mm) and
24 small mirrors (55.5mm x 55.5mm). Reflectivity of the mirrors is greater than 92%.

Control and Programming

Control Channels: 8CH (see channel chart for details)
Protocols: DMX512, RDM, Art-Net (optional), sACN (optional)
Data connection: 3 pin or 5 pin signal input/output
Display: LCD screen
Upgrade software via DMX protocol

Pan/Tilt Movement

Pan: 540°, 8-bit / 16-bit precision
Tilt: infinite movement
Automatic reset with error correction
Tilt Lock

Power and Electrical

Input Voltage Range: AC 100-240V 50/60Hz
Max Power Consumption 42W
Power Factor: ≥0.9
Maximum Fixture Current: 0.2A/220V; 0.5A/100V

Dimensions and Weight

Product Dimensions: 397mm × 262mm × 623mm
Net Weight: 13.7 kg
Carton Dimensions: 475mm × 325mm × 750mm
Gross Weight: 17.6 kg

Others

Protection Level: IP66
Operating Environment: -20℃ ~ 45℃
Maximum Surface Temperature of Fixture Body: ≤55℃

Factory Configuration

Power Cable: 1 pc (Part No.: F0200030016)
Signal Cable: 1 pc (Part No.: F0200020008)
Safety Rope: 1 pc (Part No.: F0200010002)
Clamp: 1 set (Part No.: C0499990040)

Optional Accessories/Packaging

Flycase Part No.: B0101130002
Flycase Dimensions(2 in 1): 720mm × 520mm × 845mm
Flycase Gross Weight(2 in 1): 63.4kg

FEATURES

- AQUA Mirror is a mirror fixture composed of multiple high-reflectivity glass mirrors.
- Its optical reflective glass includes one large mirror (407mm x 232mm) and 24 small mirrors (55.5mm x 55.5mm), with a reflectivity of no less than 92%.
- This product features a 360° infinite rotation function along the tilt-axis.
- When light is projected onto the reflective mirrors, adjusting the tilt-axis changes the angle of the mirrors, creating diverse light and shadow combinations and producing a layered and dynamic spatial effect. It is primarily used in venues such as bars, nightclubs, weddings, and commercial performances.

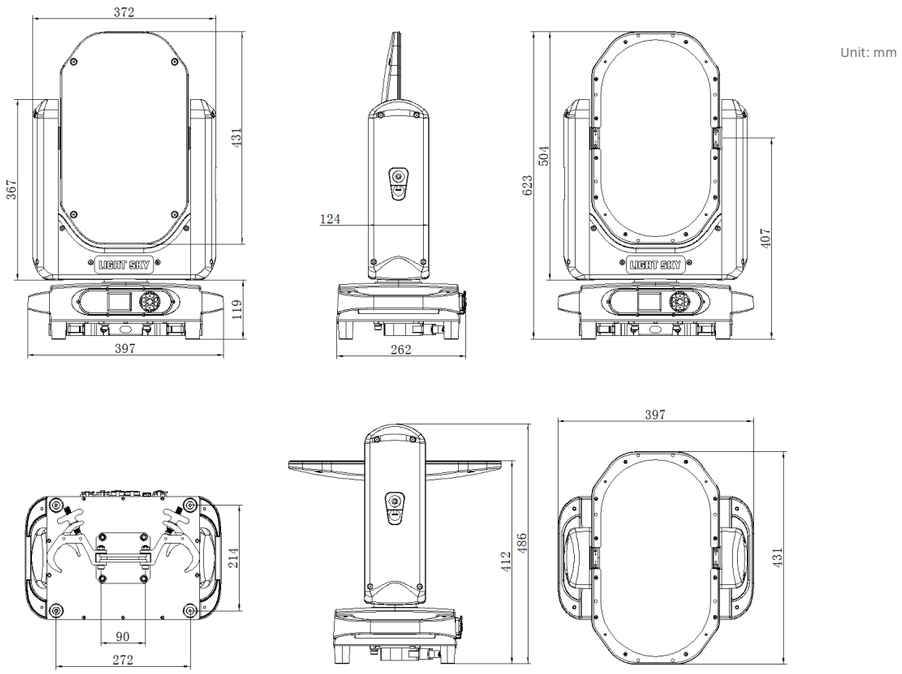

Unit: mm

